Neutral Citation Number: [2021] EWHC 3457 (IPEC)

Case No: IP-2019-000196

IN THE HIGH COURT OF JUSTICE
BUSINESS AND PROPERTY COURTS OF ENGLAND AND WALES
INTELLECTUAL PROPERTY ENTERPRISE COURT

Royal Courts of Justice

Fetter Lane, London, EC4A 1NL

Date: 22 December 2021

Before :

HIS HONOUR JUDGE HACON

- -

Between :

FLEUR TEHRANI	**Cla**
- and -	
(1) **HAMILTON BONADUZ AG**	
(2) **HAMILTON MEDICAL AG**	**Defen**
(3) **HAMILTON MEDICAL UK LIMITED**	

- -
- -

Mitchell Beebe (instructed by **Briffa Legal Limited**) for the **Claimant**

Henry Ward (instructed by **Bristows LLP**) for the **Defendants**

Hearing dates: 6-7 July 2021

- -

Approved Judgment

Covid-19 Protocol: This judgment was handed down remotely by circulation to the parties' representatives by email and released to BAILII. The date and time for hand-down is deemed to be 4pm on Wednesday 22 December 2021.

.....

HIS HONOUR JUDGE HACON

Judge Hacon :

Introduction

1.

The claimant (“Professor Tehrani”) is the proprietor of UK Patent No. 2,424,721 (“the Patent”). The Patent has the title “Method and apparatus for controlling a ventilator”, the ventilator being of the type used to assist a patient to breathe by delivering oxygen and removing carbon dioxide.

2.
The defendants (collectively “Hamilton”) make and sell ventilators. Some of the ventilators incorporate what is called the “Intellivent-ASV System”. Professor Tehrani alleges that the marketing of the Invellivent-ASV System has infringed the Patent.

3.
Hamilton deny infringement and counterclaim for revocation of the Patent on the grounds of lack of novelty, lack of inventive step and insufficiency.

4.
Mitchell Beebe appeared for Professor Tehrani, Henry Ward for Hamilton.

The Witnesses

5.
There were two expert witnesses. Prof. Tehrani gave expert evidence on her own behalf. Since 1994 Prof. Tehrani has been Professor of Electrical Engineering at California State University, Fullerton, California.

6.
There is no necessary reason why an expert should not be closely connected to the party for which he or she is giving evidence, such as being an employee. But in such instances there is an inevitable risk that the expert’s views could be coloured by loyalty to his or her employer. There may be a higher than usual requirement for the expert to show, by the answers given and manner in which they are given, that their clear and primary duty while giving evidence has been to assist the court objectively and truthfully. In this instance the expert was both claimant and inventor of the patent in suit. That requirement was more acute.

7.
I am sorry to say that Professor Tehrani did not provide the necessary indication of her objectivity. I think that she came to court to argue her case and that her evidence was given in that spirit. I do not suggest that Professor Tehrani had the intention of misleading the court, but it was my strong impression that she could persuade herself of the truth of matters that fitted her view of the case. It does not follow that she was wrong about such matters. However, I was not always sure that what she said was fair and accurate.

8.
I give an example. Professor Tehrani alleged that the work done by two teams who published papers, each of which was pleaded as an item of prior art, contained false research which had been forged. Three of the four members of one of those teams were physicians at Harvard Medical School. The other paper was written by an engineer from the Department of Electrical Engineering at the University of Wyoming and a physician at the Alaska Native Medical Center. Irrespective of the relevance of these allegations, they were serious, inherently unlikely to be true and were not shown to be true. Yet I do not doubt that Professor Tehrani believed her allegations to be accurate.

9.

I give a second example. In her first witness statement Professor Tehrani set out propositions which, she said, were part of the common general knowledge of the skilled person at the priority date. They were not supported by references to textbooks or anything else, they were just assertions. When challenged about this in cross-examination, her answer was to dismiss the idea that she had to support anything that was so obviously accepted by everyone in the field.

10.
All too often during cross-examination a challenge to something Professor Tehrani had said was likewise dismissed as a challenge borne solely of ignorance. Professor Tehrani did not give me confidence that her evidence was accurate and objective.

11.
Hamilton's expert was Professor Stephen Rees. He is Professor at the Respiratory and Critical Care Group, Department of Health Science and Technology, Aalborg University in Denmark. Professor Rees' carries out research in the development, validation and application of physiological models to solve problems arising in respiratory medicine. Counsel for Professor Tehrani rightly accepted that Professor Rees gave his answers fairly and was doing his best to help the court. I found Professor Rees to be an impressive and helpful witness.

The technical background

12.
The main function of the respiratory system is to regulate gases in the blood. Gas exchange occurs in the alveoli, very small air sacs in the lungs. Blood in the capillaries within the wall of the alveoli takes up oxygen in the inhaled air, while carbon dioxide is transferred from the capillaries to the air within the alveoli. That air is then exhaled. Meanwhile the oxygenated blood in the alveoli walls travels from the lungs to the heart where it is pumped to the organs of the body.

13.
Mechanical ventilation is required when a patient cannot breathe on their own, either satisfactorily or at all. This may be because they are undergoing surgery with anaesthesia or because of an illness. Some illnesses (such as covid-19, to use an example post-dating the priority date of the Patent) may lead to a life-threatening condition known as "acute respiratory distress syndrome" or "ARDS", where the lungs cannot provide the body's vital organs with enough oxygen. Ventilators are used to compensate.

14.
Ventilators consist of a mechanical pneumatic apparatus which delivers air to the patient, usually supplemented with oxygen. This mechanical function is controlled by an electronic system which also provides information to those monitoring the patient. The invention claimed in the Patent is concerned with an electronic system of that type.

15.
A ventilator has two functions. One is oxygenation: controlling the level of oxygen in the blood. The other is ventilation: eliminating carbon dioxide from the patient's blood.

16.
The fraction of oxygen in the inspiratory gas delivered to the patient is called the "FiO_2". The lower the level of oxygen in the patient's blood, the higher will be the FiO_2, which may vary from 21%, i.e. the figure for air in its natural form, to 100% oxygen. The aim of oxygenating the patient's blood is to

increase the partial pressure of oxygen, “PaO_2”, in the arterial blood. This is sometimes measured as the oxygen saturation or “SaO_2”. Measuring either the PaO_2 or the SaO_2 of the patient may be invasive, so a proxy method can be used known as “pulse oximetry”. A pulse oximeter is a device with a probe which is clipped to a body part, usually a finger or ear lobe. The probe uses light to measure the level of oxygen in the blood, the “SpO_2”. A typical SpO_2 of a healthy person is in the region of 95-99%. The target SpO_2 of a patient under ventilation is generally 88-95%.

17.
Another measure to be monitored is the level of carbon dioxide in the exhaled air. A “capnograph” is a device which measures the partial pressure of carbon dioxide at the end of an exhaled breath. Normal values are 5-6% CO_2.

18.
The breathing of a patient using a ventilator may be “spontaneous”, meaning that the breaths are generated by the patient, albeit assisted by the ventilator. When the patient is unable to breathe spontaneously, the breaths are “mandatory”, fully controlled by the ventilator.

19.
A ventilator will deliver gas at a pressure higher than atmospheric pressure in order to inflate the patient’s lungs. This pressure is maintained, even at the end of the patient’s exhalation, to prevent collapse or partial collapse of the alveoli and is known as the “positive end-expiratory pressure”, or “PEEP”. Excessive PEEP is harmful so it is generally maintained within the range 5-25 cm H_2O.

20.
The ventilator provides a prescribed volume of gas to the patient, known as the “tidal volume” or “V_T”. The volume of air delivered to a patient per minute is the “minute volume”. It will vary and depends in part on the partial pressure of carbon dioxide in the patient’s blood. The rate at which gas is delivered by the ventilator is known as the “respiration frequency” or sometimes the “respiration rate”.

21.
When in mandatory mode, a ventilator is in control of the lengths of both inhalation and exhalation. The ratio of the two is known as the “I:E” and is typically 2. It is important to maintain an appropriate I:E to ensure that a tidal volume of gas delivered to the patient is removed before the next volume is delivered. Failure to maintain the correct I:E may lead to a build-up of trapped air in the lungs, generating pressure known as “auto-PEEP” or “intrinsic PEEP”.

22.
A significant balance which featured in the evidence was that between FiO_2 and PEEP. Both affect the oxygen level of the patient’s blood and by the priority date it was well recognised that the balance is important to the maintenance of a satisfactory oxygen level.

23.
Professor Rees’ evidence was that at the priority date there were two well-known approaches to the manual adjustment of FiO_2 and PEEP, i.e. adjustment by the clinician. One of these followed from what were known as the “ARDSnet studies”. These were published in the New England Journal of Medicine in 2000 in what Professor Rees called a seminal paper, which the skilled person would have read. He said that the paper generated considerable interest and discussion and had been incorporated into textbooks by the priority date. He exhibited a copy of the relevant section of one of the textbooks, Essentials of Mechanical Ventilation by Dean Hess and Robert Kacmarek, 2nd ed., pub. 2002.

24.
The ARDSnet studies provided a protocol for the treatment of patients with ARDS. Fixed value pairs for FiO_2 and PEEP were devised. PEEP was then set according to the FiO_2 required.

25.
Professor Rees also made the point that if either FiO_2 or PEEP is adjusted, there will be a delay before any further adjustment is made because it will take time for the change to have an effect and to be monitored. He said that typically it takes about 30 seconds for a change in levels of oxygen in the mouth to be registered by a pulse oximeter on the patient's finger and between 2 to 5 minutes for a completed change in oxygen level in the arterial blood. For that reason, manual changes in FiO_2 (i.e. in a non-automated system) were not made more frequently than once every 30 seconds and generally less frequently. Changes in PEEP were made incrementally to avoid excessive PEEP, with a delay of at least 20 minutes between changes, more often one to two hours.

26.
At the priority date of the Patent, some ventilators used a "closed-loop system". The concept pre-dates its use in ventilators. The operator of a closed-loop system sets a target value for a variable. The target is achieved and then maintained using feedback from a sensor. A component within the system, a controller, compares a measured value of the variable with the target value, producing an error value. The error value determines an output value, the application of which causes adjustment to the variable towards the target value.

27.
By the priority date closed-loop control of PEEP and FiO_2 in ventilators had been developed. One known means of automatic control was by use of a proportional, integral and derivative ("PID") controller. The details of PID controllers do not matter; it is enough to say that they helped to avoid an overshoot of the target.

The Skilled Person

28.
Professor Tehrani characterised the skilled person as an electrical or mechanical engineer with an interest in automatic control systems for mechanical ventilators.

29.
Professor Rees suggested that one must consider a skilled team, the engineer being accompanied by a respiratory or critical care physician.

30.
It probably makes little difference since an engineer working in this field would regularly consult such a physician to ensure that they knew how mechanical ventilators could and would fit the requirements of the physician. To ensure that the physician's knowledge is not forgotten, I think it is better to consider the matters in issue in this claim through the eyes of a skilled team as suggested by Professor Rees.

The Common General Knowledge

31.
It was not in dispute that the matters I have set out in the technical background would have formed part of the skilled person's common general knowledge ("CGK"), subject to the following qualifications.

32.
Professor Tehrani said that the ARDSnet studies and the Hess and Kacmarek textbook would not have been part of the skilled engineer's CGK. But she did not deny that they would have formed part of the CGK of the respiratory or critical care physician, whom I have found to be part of the skilled team.

33.
Professor Rees' evidence was that all closed-loop systems used for ventilators were trial-and-error systems, in that measurements detected whether there was an "error', a discrepancy between the patient's condition and a target, and provided signals to move the patient towards the target.

34.
Professor Tehrani relied on a paper she had written in 2008 to draw a distinction between trial-and-error systems and continuous systems as understood at the priority date. She amplified this in section 5 of her second report:

"h) Trial-and-error, and continuous closed-loop automatic control systems (including PID systems) have [e]stablished definitions in the art, are fundamentally different, function on the basis of very different principles, and cannot be combined. Claiming that they can be combined as done in [Professor Rees' first report], is against scientific principles, is erroneous, and misleads the court."

35.
Although this was not easy to follow, my understanding of the distinction drawn by Professor Tehrani in her section 5 was that trial-and-error systems are all intermittent, in that appropriate PEEP and FiO_2 are determined at intervals. She distinguished these from continuous systems in which the determination is more frequent. In closing, Professor Tehrani's counsel put it a different way, presumably on instructions. The distinction was between a protocol-driven system, in which PEEP and FiO_2 are driven by a protocol. In a trial-and-error system there is a target.

36.
To my mind, Professor Tehrani's counsel was generating a distinction without a difference. The system is set up to have various conditions of the patient fall within desired values. If a discrepancy is detected between the patient's conditions and those values, the system alters PEEP and FiO_2 to drive the conditions towards compliance with those values. What might be described as a protocol may be involved, but that makes no difference to the principle of how the system works.

37.
There may be a distinction between systems which alter PEEP and FiO_2 at greater or lesser intervals, although there must be a continuous spectrum of possible intervals. Assuming such a distinction would have been drawn by the skilled person at the priority date, which was not made clear, it does not undermine Professor Rees' evidence that all were regarded as trial-and-error systems. I accept that evidence.

38.
Professor Rees said that it was part of the CGK that PEEP and FiO_2 could be determined and changed each at different frequencies and indeed it was likely that PEEP would be altered less frequently. Professor Tehrani said that they would not be changed at different frequencies. Professor Tehrani's view appeared to be based solely on her expressed opinion regarding the likely behaviour of clinicians. Professor Rees' evidence was based on a sound reason for a difference in frequency, namely the safety of the patient for the reasons referred to above, and I accept his evidence.

The Patent

39.
The Patent has an unchallenged priority date of 21 November 2003. Claims 1, 29, 40 and 45 were said to be independently valid and each of them infringed. On the evidence presented, claims 29 and 40 stood or fell with claim 1. Accordingly, argument centred on claims 1 and 45 and I will discuss just those two claims.

40.
Paragraph [0002] explains that ventilators of the prior art require clinicians to make important selections among the options made available by advanced ventilators. Paragraphs [0003] and [0004] discuss published prior art in which attempts were made to automatically control some of the main outputs of ventilators. Continuing in paragraph [0005] the Patent says:

"[0005] Some of the prior art on this subject is focused on controlling the patient's oxygenation, and some is intended to automatically control the breathing frequency and tidal volume. The systems intended for controlling only the oxygen level of the patient on the ventilator, either do not provide the automation of all factors that affect oxygenation and/or they do not provide a reliable and sufficiently robust response against oxygen disturbance."

41.
Paragraph [0007] explains the basic form of the invention. The term "continuous positive airway pressure" or "CPAP" is sometimes used in the Patent as an alternative for PEEP:

"[0007] In one embodiment, the present invention describes a method and apparatus that can reliably and robustly control PEEP (or CPAP) and FiO_2. These are novel features which significantly improve the oxygenation of patients during ventilatory therapy provided by mechanical ventilators as well as respiratory devices such as CPAP machines."

42.
This first embodiment is about the control of oxygenation. A more elaborate embodiment is described in paragraph [0008] which, as that paragraph states, incorporates features of US Patent No. 4,986,268 ("US 268") into the first embodiment. US 268 was, before it expired, a patent owned by Professor Tehrani and concerns a control scheme for ventilation.

43.
A block diagram of an embodiment of the more elaborate scheme disclosed in the Patent is shown in Figure 1:

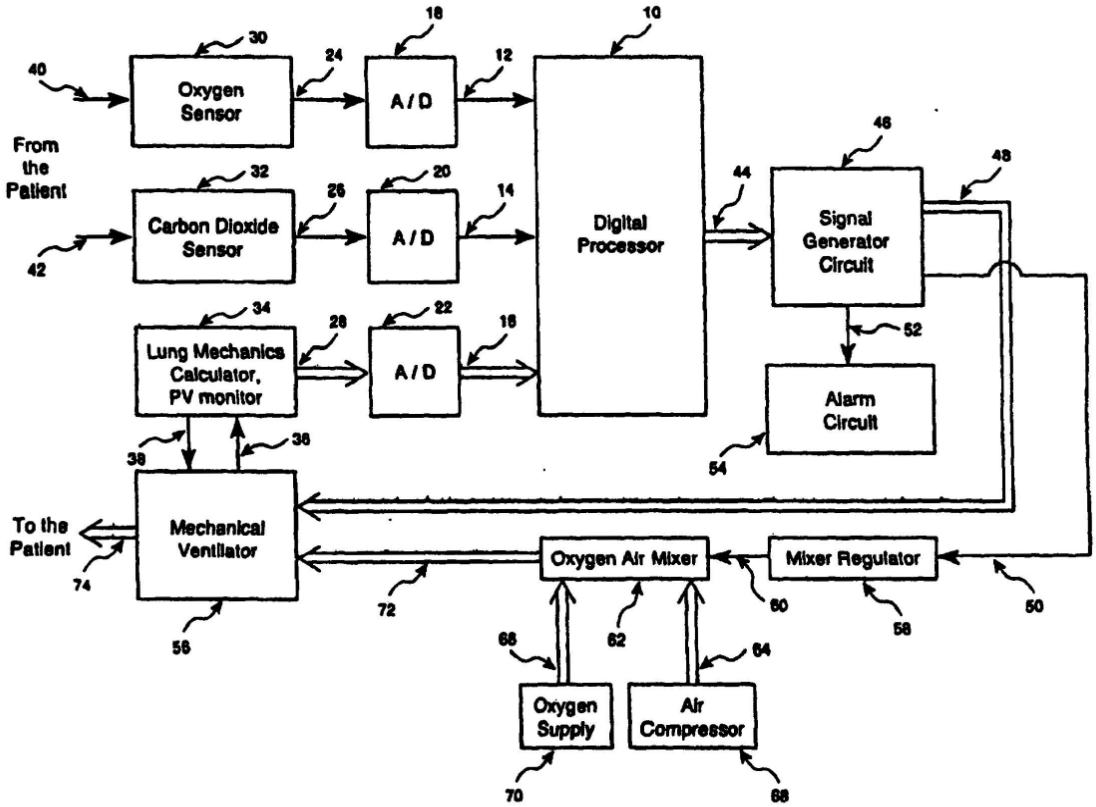

44.
The oxygen sensor (30) is preferably a pulse oximeter. It receives information from the patient (40) and produces output (24).

45.
The carbon-dioxide sensor (32), preferably a capnograph, produces another output (26).

46.
A lung mechanics calculator and pressure volume (“PV”) monitor (34) produces three outputs, collectively shown as (28). They are (i) respiratory elastance, (ii) respiratory airway resistance and (iii) the lower inflection point on the inspiratory or expiratory PV curve of the patient, or alternatively the patient’s intrinsic PEEP.

47.
Each of the signals (24), (26) and (28) passes to the digital processor (10) via a converter (analogue to digital, (18), (20) and (22)). The digital processor controls a signal generator circuit (46) which provides at least two signals. The first (48) is a signal to control PEEP, breathing frequency, tidal volume and I:E ratio, which is transmitted to the mechanical ventilator (56). The ventilator responds accordingly. The second signal from the signal generator (50) passes to the ventilator via a mixer regulator (58) and an oxygen air mixer (62). It controls the FiO_2 of the gas which the ventilator sends to the patient. In extreme cases the inputs (12), (14) and (16) will lead the signal generator circuit to send an alarm signal (52).

Claim 1

48.
This is claim 1 divided into integers:

“1A An apparatus for automatically controlling a ventilator comprising:

1B first means for processing data indicative of at least a measured oxygen level of a patient, and for providing output data indicative of:

1C required concentration of oxygen in inspiratory gas of the patient (FiO_2) and positive end-expiratory pressure (PEEP) for a next breath of the patient;

1D wherein FiO_2 is determined to reduce the difference between the measured oxygen level of the patient and a desired value;

1E wherein PEEP is determined to keep a ratio of PEEP/FiO_2 within a prescribed range and, while keeping the ratio within the prescribed range, to keep the measured oxygen level of the patient above a predefined value; and

1F second means, operatively coupled to the first means, for providing control signals, based on the output data provided by the first means, to the ventilator;

1G wherein the control signals provided to the ventilator automatically control PEEP, and FiO_2, for a next breath of the patient.”

49.
In broad summary, claim 45 adds to claim 1 the requirement that the apparatus controlling the ventilator controls not only the PEEP and FiO_2, i.e. oxygenation, but also ventilation including breathing frequency and I:E ratio:

“45A An apparatus for automatically controlling a ventilator comprising:

45B (a) means for providing data indicative of the measured oxygen level of the patient;

45C (b) means for providing data indicative of the measured carbon dioxide level of the patient;

45D (c) means for providing data indicative of respiratory elastance, and respiratory airway resistance of the patient;

45E (d) a programmable controller storing executable instructions that when executed perform the steps of:

45F (I) determining, from the data indicative of the measured oxygen level of the patient provided by (a), a required concentration of oxygen in an inspiratory gas of the patient, FiO2, to reduce a difference between the measured oxygen level of the patient and a desired value, and providing a data signal indicative of the required FiO2;

45G (II) determining a required positive end-expiratory pressure, PEEP, and providing a data signal indicative of the required PEEP, wherein the required PEEP maintains a ratio of PEEP/ FiO2 within a prescribed range, and while the ratio is maintained within the prescribed range, to keep the measured oxygen level of the patient above a predefined value;

45H (III) determining, based upon the data provided by (a), (b), and (c), an optimal breathing frequency, a required ventilation, and a required adjustment in inspiration to expiration time ratio, I:E, for a next breath of the patient, and providing data signals indicative of the same; and,

45I (e) means for providing to the ventilator, based upon the data signals provided by (I), (II) and (III), final data signals for automatically controlling: (i) the required FiO2, the required PEEP, (iii) the

optimal breathing frequency, (iv) the required ventilation, (v) the required adjustment in I:E ratio, for a next breath of the patient."

Construction

For a next breath – integers 1C and 1G

50.
According to claim 1 the apparatus which controls the ventilator seeks to reduce the difference between the measured oxygen level of the patient and a desired value (integer 1D). This is done by adjusting FiO_2 (1D). PEEP is also determined and the ratio of PEEP/FiO_2 is kept within a prescribed range, while the oxygen level of the patient is maintained above a predefined value (1E).

51.
The output data (1B) and thereby the control signals (1F) set the required FiO_2 and PEEP for "a next breath" of the patient (1C and 1G).

52.
The point in issue was whether "a next breath" should be construed to mean "the next breath", implying that the control signals adjust FiO_2 and PEEP for every breath of the patient. Alternatively "a next breath" just means a breath some time in the future.

53.
It is therefore necessary to identify the moment which would be followed by "a next breath" to make sense of the claim. I do not believe this was in dispute, but anyway it can only be the moment at which the FiO_2 and PEEP are both determined such that the ratio between may be kept within a prescribed range.

54.
As I have indicated above, it was part of the skilled person's CGK that manual adjustment of PEEP should be done incrementally at intervals of no less than 20 minutes to avoid the danger to the patient of excessive PEEP. It was also part of his or her CGK that there was a significant lag between a change in FiO_2 and a change in the patient's blood oxygen level. Hamilton argued that in consequence the skilled person would expect that there will be a lag between the determination of desired FiO_2 and PEEP and control signals to change them. This will imply a corresponding lag between determinations. If not, the patient's blood oxygen level and PEEP are liable to be driven up or down, dangerously overshooting the target.

55.
I find this persuasive. According to the ordinary meaning of the claim, use of the indefinite article in integers 1C and 1G – "a next breath" – does not rule out adjustments of FiO_2 and PEEP at every breath. But the skilled person would also understand that this need not be the case. The adjustment may take place for some later breath. The skilled person's appreciation of the potential danger of such adjusting at each breath would also lead to an understanding that in practice there will usually be a delay between the "determination" required by integers 1D and 1E on the one hand, and the provision of control signals of integer 1G, to give the required FiO_2 and PEEP of integer 1C, on the other hand.

56.

Professor Tehrani relied on an exemplary embodiment in the specification in which the interval for the system's decision whether to alter PEEP and FiO_2 was 0.75 seconds. The claim does not exclude operation with decisions at that frequency but neither does the claim require it.

PEEP is determined to keep a ratio of PEEP/FiO_2 within a prescribed range – integer 1E

57.
It was common ground that "determined" means ascertained or decided upon. Both FiO_2 and PEEP are ascertained and the PEEP/FiO_2 ratio is kept within, or brought within, a prescribed range.

58.
No prescribed range is identified. Professor Rees pointed out that, although not mentioned in the Patent, there are necessary maxima and minima for PEEP and FiO_2. PEEP will fall between atmospheric pressure and typically 30-50cm H_2O. FiO_2 must be between 21% (the oxygen content of air) and 100%. If those limits determine the prescribed range of integer 1E, any ventilator is bound to keep the PEEP/FiO_2 ratio within that range.

59.
Alternatively, if 1E is intended to refer to a narrower and clinically preferred range of ratios, the Patent does not disclose what that is. It may be that the clinician in the team would know the desirable ranges for PEEP and FiO_2 and by extension the preferred range of ratios. But then the range would be part of the CGK.

60.
There was a dispute as to whether claim 1 requires the PEEP/FiO_2 ratio to be calculated. In his first witness statement Professor Rees said this:

"167. The claim does not require determination (whether by setting or calculation) of the PEEP/FiO_2 ratio, only that PEEP is determined to keep the ratio within a range. The skilled person would appreciate that if one is presented with values for PEEP and FiO2 then the ratio between them is also known, therefore, prescribing PEEP and FiO2 values also prescribes the ratio (and, naturally, if one has values for the ratio and one of PEEP or FiO_2 then the missing term is still 'known' as it is defined by the relationship between them). This means that when PEEP and FiO2 are controlled in relation to one another the ratio between them is controlled. In my opinion, determining PEEP to maintain the ratio of PEEP and FiO2 within a prescribed range, in practice, would be satisfied by a system that manages patient oxygenation within thresholds or set limits, reflecting clinically desirable values of PEEP and FiO_2. This could be achieved by setting PEEP and FiO_2 according to values held in a table or database. In such a system the PEEP/FiO_2 ratio of the desirable values will inevitably be within a set (or prescribed) range of ratios, despite the ratio not actually being calculated as part of the control program. The claim would also be satisfied by a system that simply calculates the PEEP/FiO_2 ratio and compares this to a predetermined maximum and minimum value but I do not think the claim is limited to such a system."

61.
Professor Tehrani drew attention to paragraph [0052] of the specification:

"[0052] After the determination of the required FiO_2, the procedure of adjusting the PEEP value is started at F in step 282. In this step, the ratio of PEEP/FiO_2 is calculated."

62.

Paragraph [0052] is part of a long passage in the specification describing an embodiment of the invention. Claim 1 undoubtedly encompasses a system in which the PEEP/FiO_2 ratio is calculated. Professor Rees' point, however, was that calculation is not necessary. One way of maintaining the ratio within limits would be to prescribe limits to each of PEEP and FiO_2 such that the ratio between the two is always within a prescribed range. Since the range can be anything, this seems to me to make sense. Integer 1E of claim 1 does not specify calculation of the PEEP/ FiO_2 ratio. I find that claim 1 covers a system that will achieve the ratio without calculation although it includes a system that calculates the ratio.

Infringement

The law

63.
No issue was raised regarding the law on the infringement of a patent claim, see Actavis Group PTC EHF v ICOS Corp [2019] UKSC 15.

Claim 1

64.
Professor Tehrani alleges that the Patent is infringed by acts done in relation to Hamilton's Intellivent-ASV System. A product and process description ("PPD") served by Hamilton explained how it works.

65.
There was a dispute as to whether Intellivent-ASV determines the required treatment in the case of every breath of the patient. This falls away since on the construction of integers 1C and 1G I have found, claim 1 of the Patent covers an apparatus which makes the determination both for every breath and also where the determination is less frequent. Intellivent-ASV satisfies that aspect of claim 1.

66.
There was a further argument relating to integer 1E. Hamilton argued that Intellivent-ASV does not determine PEEP by reference to a ratio of PEEP/FiO_2 within a prescribed range, but by reference to target values for each variable.

67.
The PPD explains that the output signals for PEEP and FiO_2 are determined by reference to values which can be graphically represented. Figure 6 of the PPD shows the circumstances in which the system controller determines that an increase in treatment level is required. Figure 7 shows graphically the same thing for a decrease in treatment level:

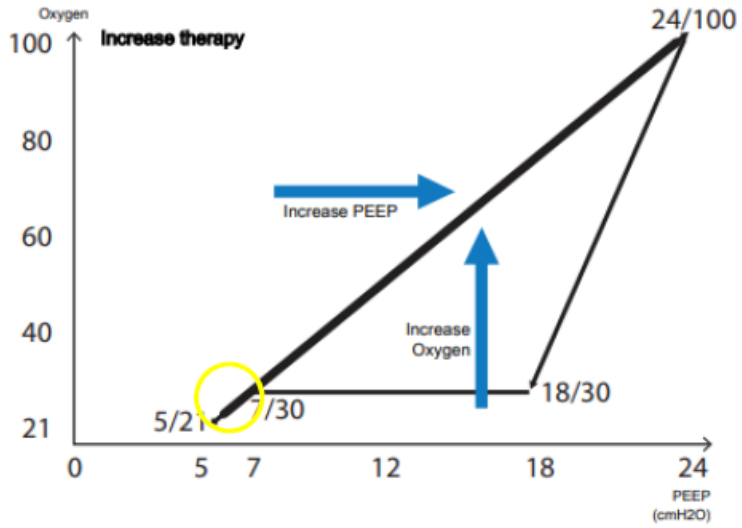

Figure 6: Optimal Combination of FiO2 and PEEP (PEFIOS Loop). The values on the "upper limb" are used if the controller determines an increase the treatment level. Reproduced from Figure 1-23 of Annex C.

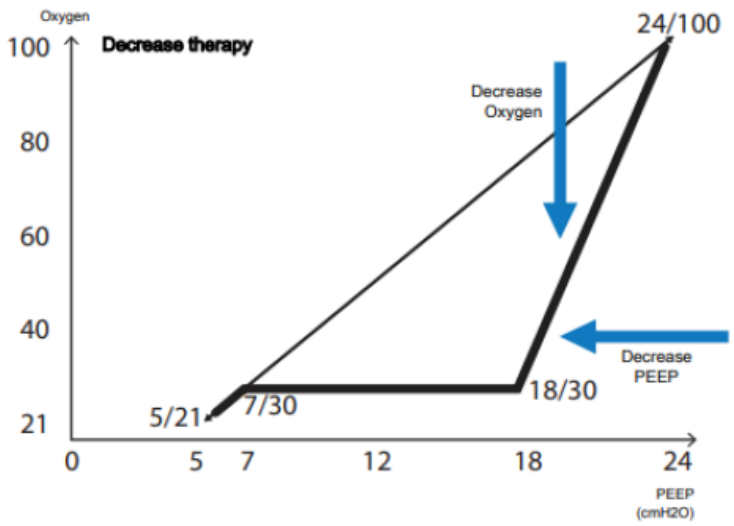

Figure 7 - Optimal Combination of FiO2 and PEEP (PEFIOS Loop). Lines with left and downward pointing arrows are used if the treatment level controller determines a decrease in treatment level. Reproduced from Figure 1-24 of Annex C.

68.

In each case the thick black line marks the target values for PEEP and FiO_2. Where treatment is to be increased and the patient's values are to the left of the thick line, PEEP is increased. If the patient's oxygen level is below the line, FiO_2 is increased. When treatment is to be decreased, PEEP will be decreased if the patient's value lies to the right of the thick line, FiO_2 will be decreased if the oxygen value is above the line. Unlike the straight line of Figure 6, the target line of Figure 7 is closer to a dog-leg shape.

69.

Professor Tehrani argued that the straight line of Figure 6 represents a fixed PEEP/ FiO_2 ratio. Therefore during an increase in therapy (though not during a decrease) Intellivent-ASV is necessarily moving the patient towards and thereafter seeking to maintain the patient within that fixed ratio.

70.
Hamilton said that any straight-line graph can represent a fixed ratio between two variables only if the line passes through the origin. That is true, although one cannot tell from Figure 6 whether the line would pass through the origin. Hamilton said not – it would pass close to, but not through the origin. Looking at the three ratios spelt out: 5/21, 7/30 and 24/100, that appears to be right. The line nearly but not exactly represents a fixed value for PEEP/FiO_2.

71.
Integer 1E requires that PEEP/FiO_2 should be kept within a prescribed range. Hamilton suggested that the skilled person would expect that range to be graphically represented something like this:

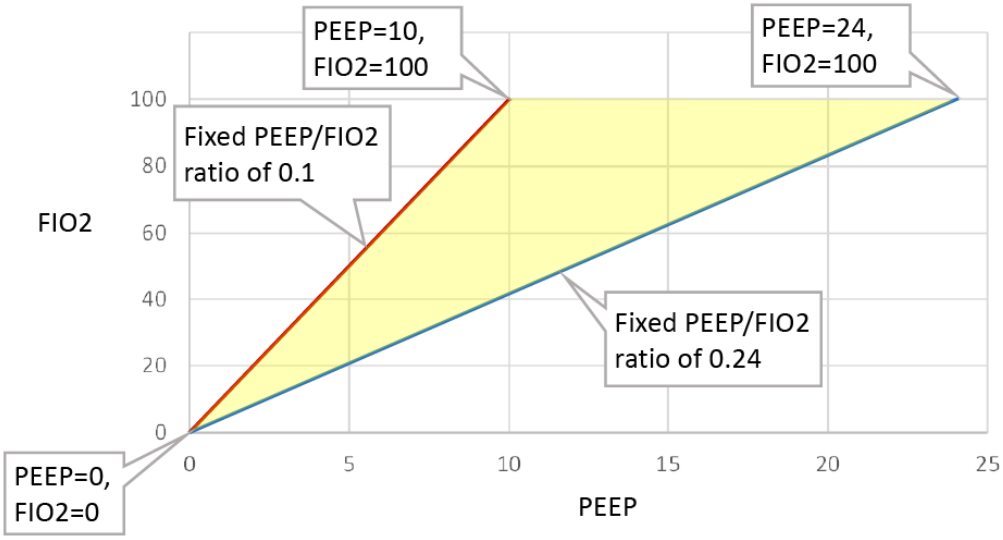

72.
The two lines, each passing through the origin, represent a PEEP/FiO_2 ratio. In this instance one of the ratios is 0.1 and the other 0.24. The area between the two lines is the range between those two ratios – the prescribed range if 0.1 and 0.24 were the prescribed limits.

73.
I agree that this is probably what would first occur to the skilled person who has read the Patent and is considering the meaning of the words of integer IE. But the words are broad – covering any sort of range including one of such narrow bandwidth that it comes close to being represented by a single line. Figure 6 of Hamilton's PPD represents a range of sorts, of narrow bandwidth. In my view, such is the broad wording of integer 1E that it is satisfied by the relationship between PEEP and FiO_2 shown in Figure 6.

74.
When Intellivent-ASV is being used to increase the treatment level of the patient, integer 1E is satisfied. Therefore when Intellivent-ASV is being used to increase treatment, claim 1 is infringed on a normal construction of the claim.

Claim 45

75.
Integers 45B, 45F and in particular 45H require the apparatus to use data indicating the oxygen level of the patient, among other data, to determine a required FiO_2 and a required optimal breathing frequency, a required ventilation and a required I:E.

76.
The PPD indicates that Intellivent-ASV does not use the oxygen level of the patient as part of the system. Professor Rees endorsed this.

77.
Professor Tehrani's counsel told me that his instructions were that PEEP is ultimately determined from SpO_2 data and therefore provides a means for indirect measurement of oxygen levels. This seemed to be a late developed argument. I am not satisfied that it was established on the evidence that PEEP is necessarily related to oxygen levels and I can see no reason why it should be. It was not put to Professor Rees. Had it been, and had he been taken through the stages of the suggested indirect relationship and accepted the point, I would have taken the point to be a good one. As it is, I reject it.

78.
Claim 45 is not infringed on a normal construction of the claim.

An equivalent to the invention of claim 45

79.
Professor Tehrani's skeleton argument said that the question of infringement on the basis of equivalence would be returned to after cross-examination. It was not pursued in counsel's closing argument.

The Prior Art

80.
Four items of prior art are relied on by Hamilton:

(1)
Anderson J.R. and East T.D, A closed-loop controller for mechanical ventilation of patients with ARDS, Biomedical Sciences Instrumentation 2002, vol. 38m 289-294 ("Anderson");

(2)
Waisel et al., PEFIOS: An Expert Closed-Loop Oxygenation Algorithm, Medinfo '95: Proceedings of the Eighth World Congress on Medical Informatics, Vancouver Trade & Convention Centre, Vancouver, British Columbia, 23-27 July 1995 ("Waisel");

(3)
US Patent No. 4 986 268 ("US 268"); and

(4)
Tehrani F, Dual Control System for Ventilatory Treatment of Premature Infants, Proceedings of the 5th International Conference on Information Systems, Analytics and Synthesis, Vol. 8, Concepts and Applications of Systemics, Cybernetics and Informatics, 31 July – 4 August 1999 ("the Tehrani Paper").

The law

81.
There was no dispute about the usual principles by which novelty and inventive step are assessed, or that assessment in this claim requires anything other than those usual principles, see in particular Synthon BV v SmithKline Beecham plc [2005] UKHL 59 and Pozzoli SpA v BDMO SA [2007] EWCA Civ 588.

Validity of claims 1 and 45 – Anderson

82.
Hamilton alleged that claims 1 and 45 lack novelty and inventive step over Anderson.

83.
Anderson discloses a closed-loop mechanical ventilator. It is stated to be based on well-established protocols to maintain appropriate levels of PEEP and FiO_2 in patients with ARDS. It uses a PaO_2 sensor coupled to a Mac computer that continuously controls PEEP and FiO_2 settings. The system is shown diagrammatically in Figure 2:

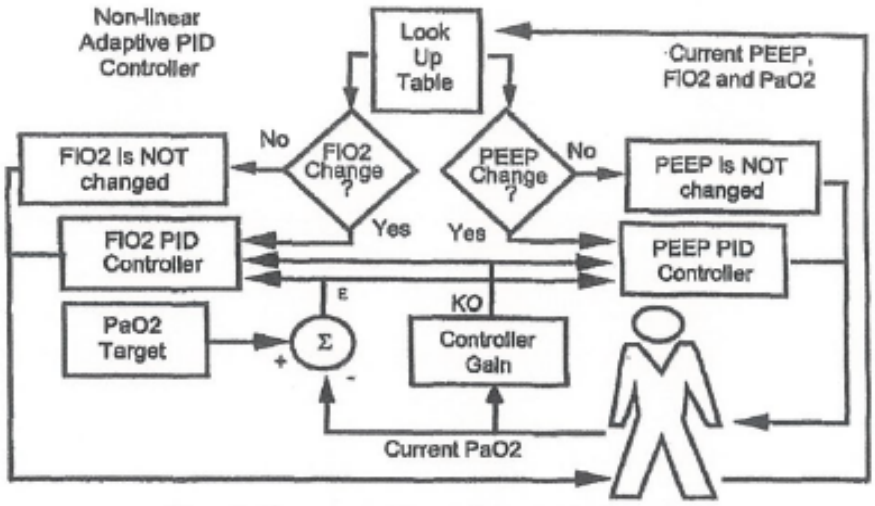

Figure 2. Components of the non-linear adaptive PID controller.

84.
There are two separate PID controllers, one for each of PEEP and FiO_2. Five look-up tables are used to determine whether PEEP or FiO_2 is to be changed, which happens if the two are outside approved combinations.

Novelty

85.
Professor Tehrani advanced two differences between the Anderson system and that of the Patent. The first was that Anderson does not disclose an adjustment of PEEP or FiO_2 for the next breath of the patient. That is correct, but I have found that the term “a next breath” in claims 1 and 45 of the Patent covers a breath other than the breath immediately following the determination of FiO_2 and PEEP.

86.
The second difference suggested was that Anderson does not disclose the notion of a prescribed range of PEEP/ FiO_2 ratios. In disputing this, Professor Rees drew attention to Figure 3 of Anderson. Figure 3 shows one of the look-up tables, that for a “threatening” set of conditions. There are 6 columns, each one for a different PEEP pressure ranging between 5 and 25 mmHg. There are 8 rows for FiO_2 values running from 40 to 100%. Each of the 48 units is marked either “F” for increasing FiO_2, “P” for increasing PEEP, “B” for increasing both or “N” for increasing neither. Thus there is a prescribed action (including inaction) for each combination of the 6 PEEP values and 8 FiO_2 values.

87.
Professor Rees said this in his first report:

“213. Anderson discloses a system that determines whether PEEP, FiO2, both or neither should be adjusted based on their relationship to one another as illustrated by the tables in Figure 3 of Anderson. The look-up tables illustrated in Figure 3 are arranged such that change in PEEP moves the settings within a clinically acceptable range towards preferred combinations of PEEP and FiO2 values and therefore the ratio between them. The spread of ratios that would trigger a change in PEEP and FiO2 is quite broad in the table for ‘Threatening’ status; this makes sense as the adjustment is designed to get the patient ‘out of trouble’ and hence it is appropriate that adjustment of both parameters takes place in the majority of cases.”

88.
In Anderson’s system PEEP and FiO_2 are independently controlled. I agree with Professor Rees that Figure 3 indicates that each will be adjusted according to their relationship to one another. I do not, however, accept Hamilton’s argument that this constitutes a clear and unambiguous disclosure of determining PEEP to keep the PEEP/FiO_2 ratio within a prescribed range. Nothing in the way of a prescribed range is disclosed.

89.
Neither claim 1 nor claim 45 lacks novelty over Anderson.

Inventive step

90.
Professor Rees gave no evidence as to whether, and if so why, the skilled person would contemplate an adjustment to the Anderson system to include a prescribed range of PEEP/FiO_2 ratios or how any such adjustment would be approached. In argument Anderson appeared to be treated as prior art only relevant to the novelty of claims 1 and 45. I therefore find that neither claim 1 nor claim 45 lacks inventive step over Anderson.

Validity of claim 1 – Waisel

91.
Waisel is relied on by Hamilton to allege that claim 1 lacks novelty, or failing that inventive step.

92.
Waisel describes a system using a closed-loop, computer controlled, algorithm that allows automated changes to PEEP and FiO_2. The system is referred to by the acronym PEFIOS.

93.
The therapy adjustments to PEEP and/or FiO_2 are based on the condition of the patient and are done by reference to a look-up table. The table has four therapy levels: rapidly and slowly increasing, and rapidly and slowly decreasing.

Novelty

94.
Professor Tehrani argued that the attack of novelty fails for the same two reasons advanced against Anderson: no disclosure of adjustments to PEEP and FiO_2 for each breath of the patient and no disclosure of keeping the PEEP FiO_2 ratio within a prescribed range.

95.

The first point does not succeed because claims 1 and 45 cover the circumstance of adjusting PEEP and FiO_2 at greater intervals than every breath. It is not necessary for me to decide whether the control signals in Waisel are sent to the ventilator sufficiently frequently to set PEEP and FiO_2 for each breath, although on my reading of Waisel that may well be the case.

96.

The look-up table for each of the four alternative tiers of therapy in Waisel contain instructions on how PEEP and/or FiO_2 should be adjusted depending on (a) the patient's oxygen saturation, (b) the current FiO_2 and (c) the current PEEP.

97.

Figure 2 shows graphically the spread of PEEP and FiO_2 combinations which are acceptable to the system, what Waisel calls the "therapy continuum".

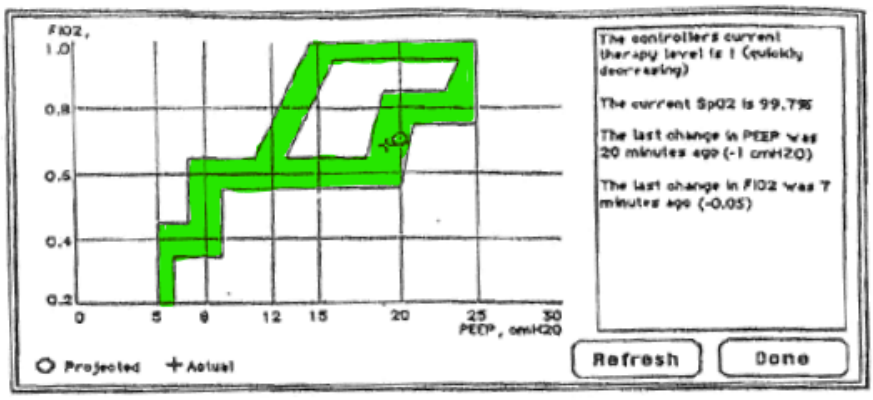

Figure 2. The PEFIOS Location Screen. The graph shows the location of the patient within the therapy continuum, and the dialogue announces the therapy level, current saturation, and last therapy adjustments.

98.

The PEFIOS system ensures that the PEEP/FiO_2 ratio is maintained within, or brought within that range of ratios defined by the therapy continuum. Counsel for Hamilton made this more explicit by annotating Figure 2 to show ratios which can be derived from Figure 2:

Figure 2 of Waisel 95 annotated with PEEP/FIO2 ratios (FIO2 as %)

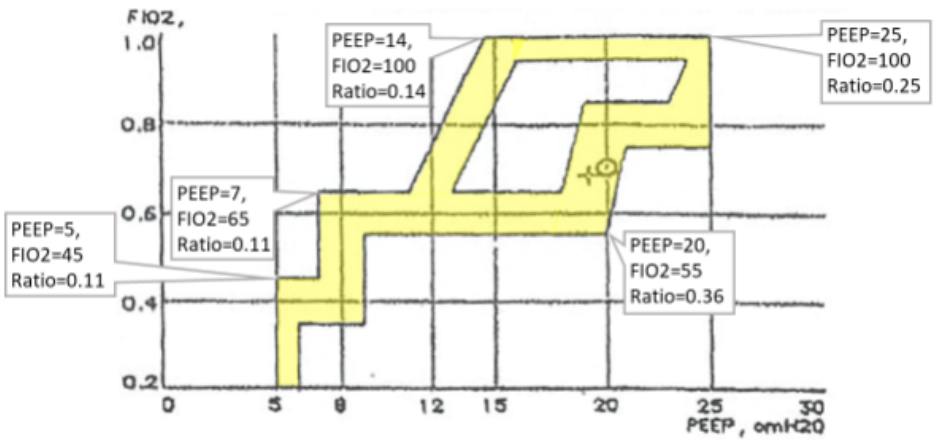

99.

In my view, the skilled person would understand that Figure 2 of Waisel is clearly and unambiguously presenting a prescribed range of PEEP/FiO_2 ratios within which the ascertained PEEP and FiO_2 values will be kept, or within which they will be brought.

100.
Figure 2 states that the therapy continuum shown relates to the quickly decreasing therapy level. The small plus sign shows where the patient is located in the continuum, so this may mean that there is a single continuum for all four therapies and depending on where the patient is located by reference to their condition, one of the four therapy levels will apply. On the other hand, it is not made clear that the same continuum would apply for all four other therapy levels. But at least when the PEFIOS system is being used for quickly decreasing therapy it falls within claim 1 of the Patent.

101.
Claim 1 lacks novelty over Waisel.

Validity of claim 45 – Waisel

102.
It was not in dispute that much of the invention claimed in claim 45 was disclosed by Professor Tehrani's earlier patent, US 268 and that the latter is incorporated by reference into the teaching of the Patent. The new disclosure in the Patent said to be inventive is claimed in integer 45H: three sets of data, namely (a) measured oxygen level, (b) measured carbon dioxide level and (c) respiratory elastance and airway resistance, are used to determine I:E for a next breath of the patient.

103.
Professor Rees' evidence was that at the priority date the skilled person would have known that a system for controlling ventilation could be used with the Waisel system and that this would have served to determine I:E for a next breath (within the meaning of that term as I have found it to be above) by the use of the three sets of data (a), (b) and (c) mentioned above. Setting the I:E ratio would have been a necessary part of controlling a mechanical ventilator and it would have been obvious to do this by means of known ventilator control systems available at the priority date.

104.
Professor Tehrani said that it was not obvious to combine a known ventilator control with the Waisel system in that way. She explained this in her first report (original bold lettering):

"98. Look up tables such as the table used in PEFIOS (Figure 1 of Waisel 1995 shown in paragraph 93) are mainly designed for manual use. When these tables are implemented in a computer, the resulting software is a semi-manual, trial and error tool for intermittent adjustment of parameters. Such a system is profoundly different from a continuous closed-loop control system. **The system of the Patent and the Intellivent-ASV are continuous closed-loop control systems that cannot be combined with a semi-manual look up table referred to as PEFIOS.**"

105.
At no point did Professor Tehrani explain her reasoning any more clearly than that and I do not find it easy to follow. It appears to be another way of saying, as Professor Tehrani emphasised elsewhere in her evidence, that trial-and-error and continuous closed loop systems cannot be combined, an assertion which I have not accepted above.

106.

Moreover, in this instance, if there were a difficulty at the priority date in using known means to determine I:E by reference to (a) measured oxygen level, (b) measured carbon dioxide level and (c) respiratory elastance and airway resistance in combination with a system such a Waisel, so as to perform the invention claimed in claim 45, the Patent does not explain how that difficulty is to be overcome. There is an apparent squeeze with insufficiency.

107.
Taking all this into account, I conclude that Professor Tehrani's reasoning in relation to Waisel and claim 45 was indeed a repeat of her unfounded assertion that there is a distinction between trial-and-error systems and continuous closed-loop systems and the two can never be combined.

108.
I accept Professor Rees' evidence on this aspect of the case and I find that claim 45 is obvious over Waisel.

Validity of claim 45 – the Tehrani Paper and US 268

109.
Hamilton relies on the combination of the Tehrani Paper and US 268 to render the invention of claim 45 obvious. The Tehrani Paper includes a footnote which refers to US 268 and for that reason Hamilton says that the two documents would be read together by the skilled person.

110.
The Tehrani Paper discloses an arrangement which combines two closed-loop systems. One controls oxygenation by varying FiO_2 by reference to automatically measured PaO_2. There is no automatic measurement of PEEP or any disclosure of maintaining the PEEP/FiO_2 ratio within a prescribed range. The other system controls ventilation according to the invention claimed in US 268.

111.
US 268 is concerned with a method for automatic ventilation control. Data representing carbon dioxide and oxygen levels in the patient's exhaled breath, the patient's lung elastance, lung air viscosity and barometric pressure, plus optionally the metabolic rate ratio when the patient is in exercise, are fed to an algorithm which generates output values for breathing frequency and ventilation.

112.
Although there is no automatic measurement of PEEP, the specification of US 268 mentions the possibility of manual measurement:

"In the manual control mode, the minute ventilation and the frequency of every breath or alternatively the positive end expiratory pressure 'peep' is specified for the respirator by an operator. The end expiratory pressure may also be continuously monitored by additional sensors through the reserved channels of the A/D converter. A system reset is required to restart the controller."

113.
Professor Rees took the view that a skilled person reading the Tehrani Paper would note the footnote reference to US 268 and adopt its teaching for automatic ventilation control. He or she would be aware that oxygenation management solely by FiO_2 control has its limitations, would therefore also think of adjusting PEEP and in fact would be prompted to do so by the passage in the specification just quoted. Further, since FiO_2 measurement is automated, it would be obvious to automate the measurement of PEEP as well. Professor Rees acknowledged that the skilled person would know that

there could be downsides to automating PEEP control, such as the risk of applying excessive pressure, but also know that there would be upsides. Next, the skilled person would know about the ARDSnet publication and thus be aware of fixed values for FiO_2 and PEEP pairings. He or she would accordingly have adopted such fixed values. Finally, it would then be obvious to implement a system which ensured PEEP and FiO_2 were balanced within a prescribed range of ratios.

114.
To my mind, Professor Rees' reasoning is an example of an argument of lack of inventive step developed by setting out a series of steps by which the teaching of a piece prior art can be adjusted to arrive ultimately at the invention of the patent in suit. Each of the steps may be individually obvious but the fallacy of the argument is that performing all of them, without exception, may not have been obvious. Professor Rees' evidence does not say, expressly, that performing all of these steps would have been obvious at the priority date. To the extent that this is implied, Professor Rees does not say why adopting all of the steps collectively would have been obvious. I am not satisfied that it would have been.

115.
Claim 45 does not lack inventive step over the Tehrani Paper and US 268.

Insufficiency

116.
Hamilton's arguments on insufficiency were run as squeezes and do not arise on the findings I have made.

Conclusion

117.
The Patent is invalid. Had it been valid, claim 1 would have been infringed, claim 45 would not have been infringed.